5064

Clamp equal swept tee - 316L BS4825

Nom size	C	L	R	Max Op Pressure (bar) @ 20°C	Stock No
1"	25.4	86.5	38.1	10	5064-6026
1½"	38.1	106.5	57.2	10	5064-6038
2"	50.8	131.5	76.2	10	5064-6051
2½"	63.5	156.5	95.3	10	5064-6064
3"	76.2	176.5	114.3	10	5064-6076
4"	101.6	216.5	152.4	10	5064-6102

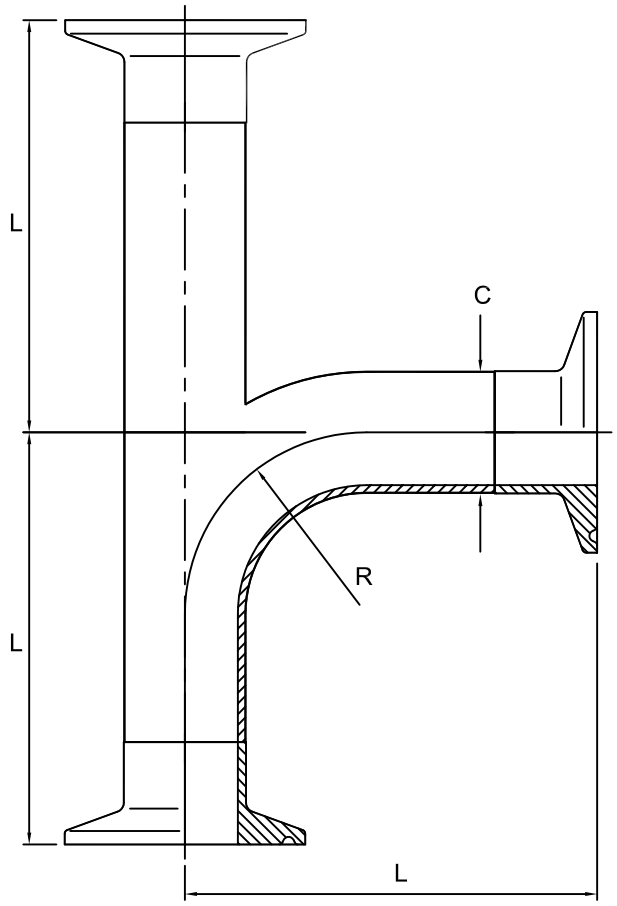

Technical Data:

- Material: 316L Stainless Steel
- Finish: Descaled ID, Polished 0.8Ra OD (0.4Ra available)
- Pressure/Temperature: See above (temp according to seal material)
- Associated standards: BS 4825 : Part 3 : 1991 (1" to 4" inclusive)
- Tolerance: +/- 0.5mm
- Seals: EPDM, Nitrile, Silicone, Platinum Cured Silicone, Encapsulated & Solid PTFE, Viton®
  Viton® is a registered trademark of DuPont Dow Elastomers
- Applications : Clamp fittings are suitable for beverage, fine chemical, pharmaceutical and biotech applications, where crevice free conditions are critical.

- We stock a comprehensive range of clamp fittings including unions, ferrules, bends, tees, reducers, hoseliners and adaptors
- Components can be fabricated to customer specification
- Fabrication capabilities include frameworks, skid mounted systems, manifolds, jacketed assemblies, adaptors, flowplates and spool pieces.
- In-house services include machining, welding, fabrication, polishing.

D5064-V02

NOTES

- Dimensions are provided in good faith but maybe subject to change
- Seals must be chosen for required operating medium & temperature

Axium Process Ltd
Hendy Industrial Estate
Hendy, Swansea
SA4 0XP UK

T +44 (0)1792 883 882
F +44 (0)1792 886 049
E info@axiumprocess.com
W www.axiumprocess.com